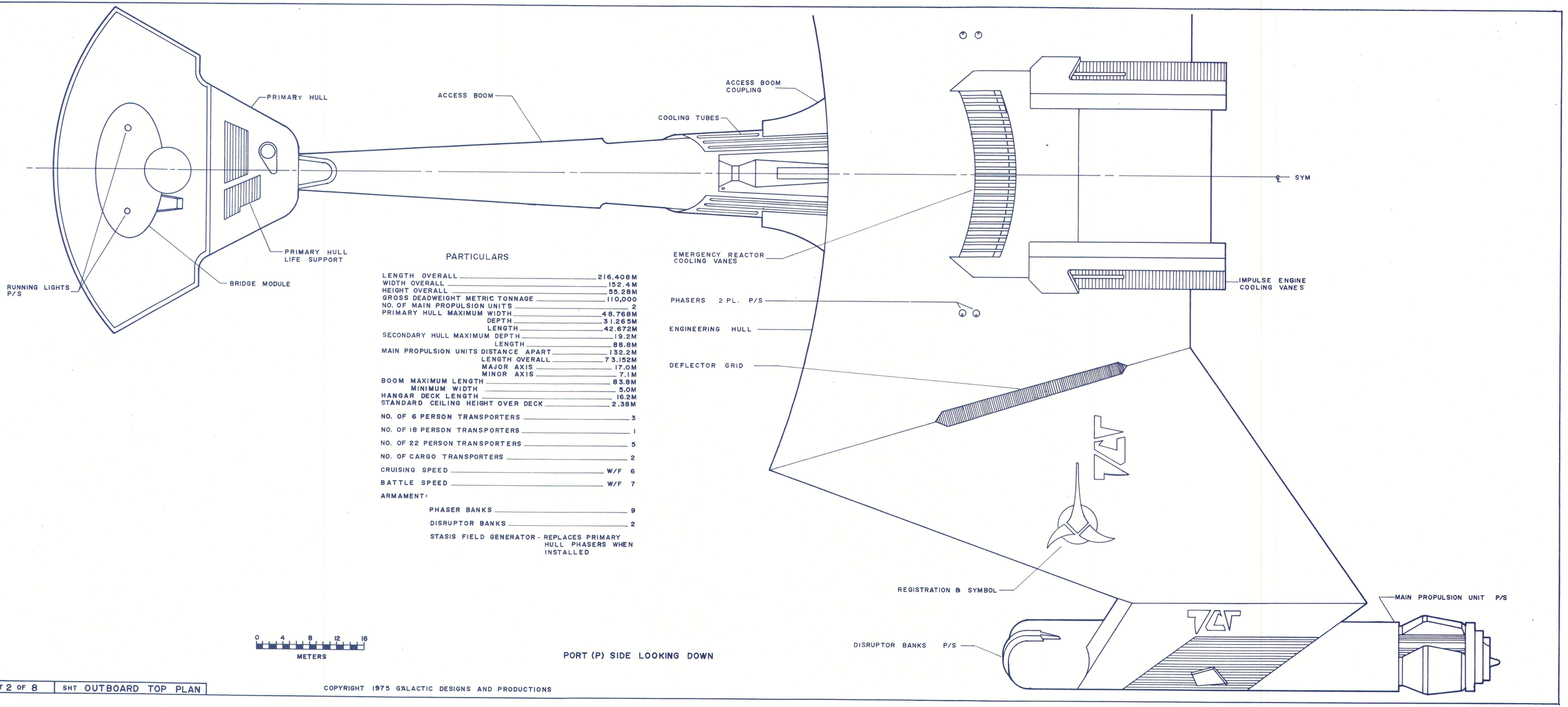

PARTICULARS

LENGTH OVERALL	216.408M
WIDTH OVERALL	152.4M
HEIGHT OVERALL	55.28M
GROSS DEADWEIGHT METRIC TONNAGE	110,000
NO. OF MAIN PROPULSION UNITS	2
PRIMARY HULL MAXIMUM WIDTH	48.768M
DEPTH	31.265M
LENGTH	42.672M
SECONDARY HULL MAXIMUM DEPTH	19.2M
LENGTH	88.8M
MAIN PROPULSION UNITS DISTANCE APART	132.2M
LENGTH OVERALL	73.152M
MAJOR AXIS	17.0M
MINOR AXIS	7.1M
BOOM MAXIMUM LENGTH	83.8M
MINIMUM WIDTH	5.0M
HANGAR DECK LENGTH	16.2M
STANDARD CEILING HEIGHT OVER DECK	2.38M
NO. OF 6 PERSON TRANSPORTERS	3
NO. OF 18 PERSON TRANSPORTERS	1
NO. OF 22 PERSON TRANSPORTERS	5
NO. OF CARGO TRANSPORTERS	2
CRUISING SPEED	W/F 6
BATTLE SPEED	W/F 7
ARMAMENT:	
PHASER BANKS	9
DISRUPTOR BANKS	2
STASIS FIELD GENERATOR - REPLACES PRIMARY HULL PHASERS WHEN INSTALLED	

PORT (P) SIDE LOOKING DOWN

SHT 2 OF 8 | SHT OUTBOARD TOP PLAN

COPYRIGHT 1975 GALACTIC DESIGNS AND PRODUCTIONS